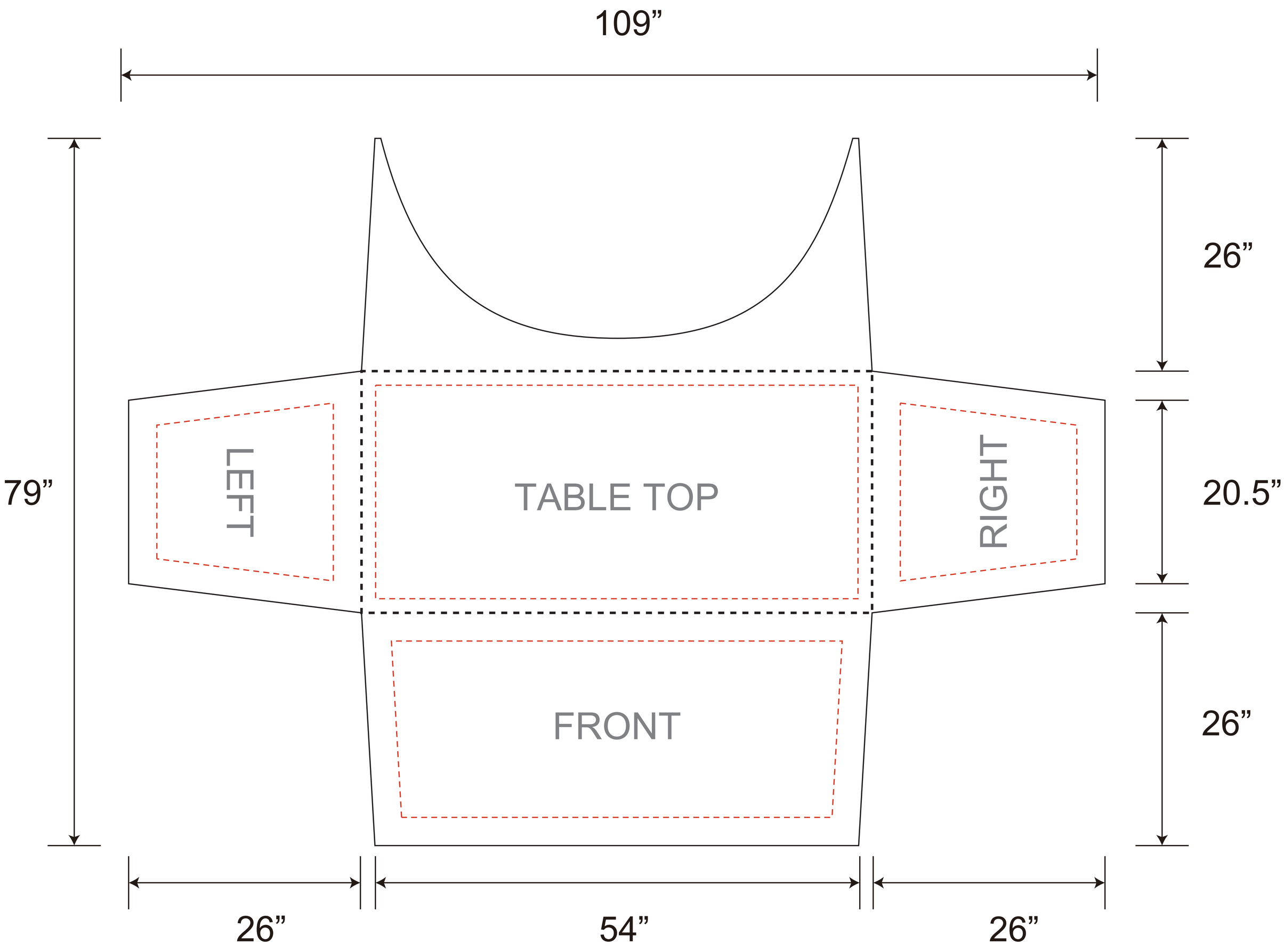

Tips: 1. Please put your main artwork inside the safe zones
2. Please delete the layer before saving

Safe Zone