24″x29″ Round Stretch Table Covers-S-EP180G

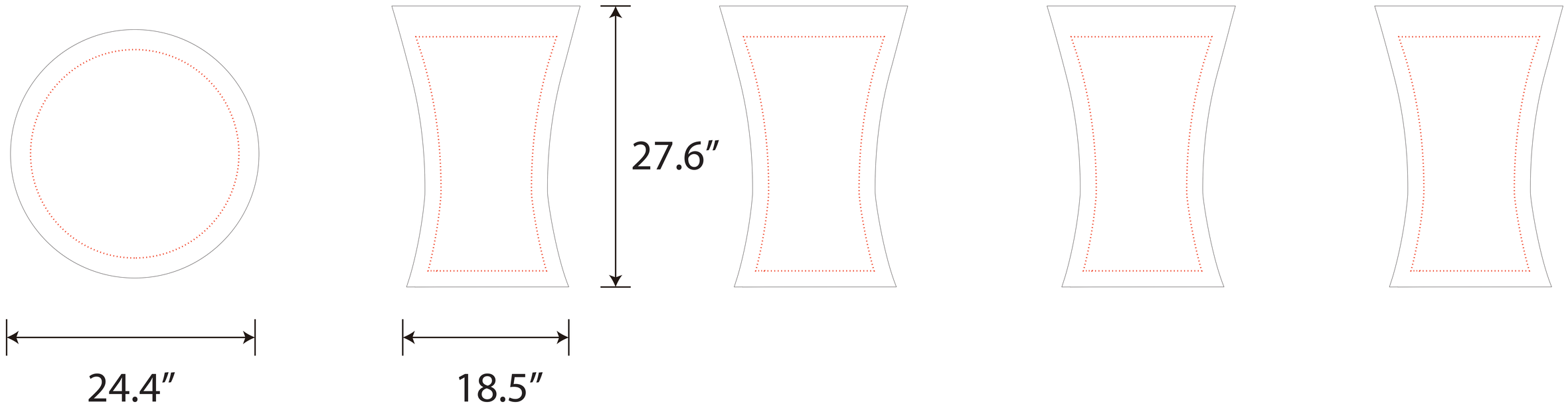

Tips: 1. Please put your main artwork inside the gray area
2. Please delete the layer before saving