19.4”Dtop x 22.875”H x 17”Dbottom-180G
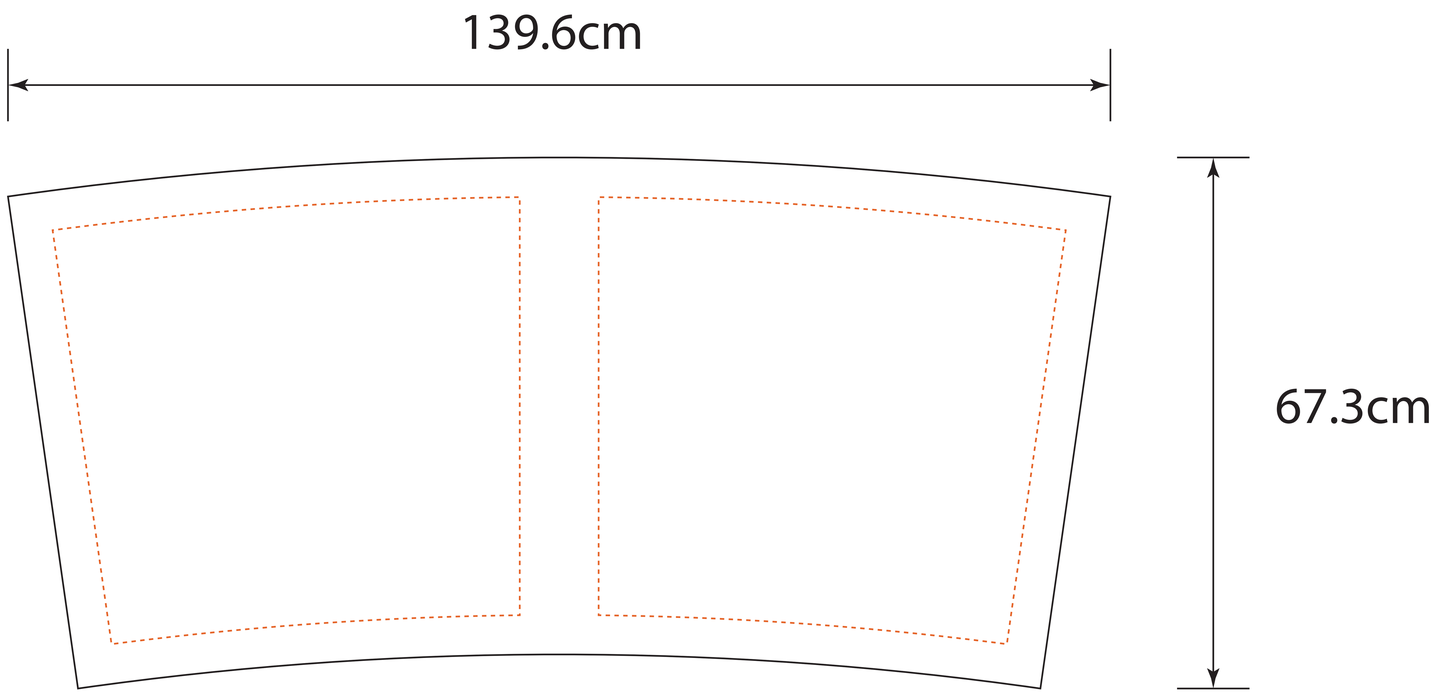
B